Spring driven cable reels

ALFSR007

Manufactured by Cavotec ALFO

CAVOTEC ALFO spring driven cable reels

The Cavotec Group

Cavotec is the name of a group of companies specialized in power supply technology for cranes and other industrial equipment. It is formed by 6 manufacturing companies located in Canada, Germany, Italy, Sweden and UK, and by 16 Cavotec sales companies which, together with a network of Distributors, serve more than 30 countries in five continents.
Each manufacturing company, no matter where it is located, aims at being a market leader in its field by providing innovative and reliable products to Group customers.
Although they manufacture different products in different countries, they are globally supported and coordinated by the Cavotec Group in their product development and marketing activities.
Each sales company, and each distributor, has a policy aiming at better serving its local market with the full support of the Cavotec Group.

CAVOTEC ALFO: a Cavotec company

The products manufactured by ALFO described in the following pages, as well as other quality products in the field of crane and power technology, are distributed around the world by the Cavotec sales companies and by a network of selected Distributors.

Our aim is to be local everywhere

Great emphasis is put in providing the highest quality not only in the products, but also in service and backing to their customers. Our philosophy in fact is to be local everywhere.

Our fields of activity are

Mining, tunnelling

Steel Mills

Forestry

Ports, Terminals

Robots, Automation

Offshore

Constructions

Contents

Product information	Page 4
Standard range	Page 8
Type 125	Page 10
Type 190	Page 12
Type 220	Page 14
Type 280	Page 16
Type 280HA	Page 18
Type 400	Page 20
Type 500	Page 22
Accessories	Page 27

CAVOTEC ALFO — world leader in spring driven cable reels

Established in 1991, ALFO is a young German manufacturing company in the specialised field of spring reels and slipring columns.
Its founder, Günter Hackauf, started ALFO after 25 years of experience in manufacturing and marketing components in this specific industry. This explains the success of the ALFO company, which in only 5 years has become a leading German manufacturer in its sector.
In 1997 ALFO became a member of the Cavotec Group, a world leader in cable reel technology, as one of its manufacturing units.

The ALFO range of products developed by Günter Hackauf are of highest quality level, manufactured in the most cost-effective way. Standard components produced in large series, are combined and assembled enabling ALFO to serve the market and meet both standard and special requirements at competitive prices and with short delivery times.

The emphasis on quality in production and customer service, which distinguishes the ALFO operation, totally corresponds to Cavotec Group policy adopted worldwide.
The Cavotec Group sales and service organization covering some 30 countries is therefore well prepared to serve ALFO customers throughout the world.

This catalogue covers the **ALFO standard range of spring driven cable reels** with wide drums and flange mounting. The ALFO standard spring reels are built with modular components which allows a great number of combinations covering most common requirements. The ALFO spring reels are strong and well designed in order to guarantee the highest reliability even in difficult applications.

All reels are equipped with two totally sealed bearings which are lubricated for lifetime. The special ALFO design features well dimensioned shaft and bearings which allows easy and fast exchange of springs. Furthermore ALFO has been the first manufacturer to build its sliprings in a totally sealed and modular unit, fully separated from the mechanical parts. Protection of sliprings and reel is IP65/66.

The springs are made of high-grade special steel which guarantees a long lifetime. Every spring is mounted inside a spring housing in order to avoid friction and wear.
The slipring assembly is mounted in a solid glassfiber reinforced plastic housing which withstands corrosion and mechanical wear. The housing is designed to minimise condensation and to guarantee complete water tightness through glands and seals.

Corrosion protection is also a major feature with ALFO reels. All steel plates and parts are either hot dip galvanised or have a polyester coating. ALFO offers also as an optional stainless steel bolts, nuts and all external parts in hot dip galvanised steel with additional coating.

ALFO spring driven cable reels meet all applicable IEC international norms and standards and follow the latest EU-requirements (CE-marking).

A view of CAVOTEC ALFO factory in Overath, Germany.

Product information

STANDARDS and NORMS
Spring driven cable reels are subject to the standards and norms set forth in VDE 0100 and the UVV in their latest edition

Warranty
Our warranty follows the general delivery conditions of the electric industry for products and services. Wear parts are exempted from the warranty. See also our Terms of Delivery.

General instructions regarding spring reel installation
The drum shall be installed in such a way to ensure that the cable is reeled and unreeled to/from the drum freely and unhampered. **Forced guidance and too small bending radii on sheaves and roller guides shall be avoided.**
The ALFO spring reels allows the feeding point of the cable to be placed on either side of the drum . The following selection tables cover only wide cable drums, with random wrapped layers, taking in consideration 11 typical application cases.

Horizontal application Cable unreeling horizontally (Case 1)
Drum mounted on a mobile vehicle, cable resting on a continuous surface or on supports having a distance of less than 1 m. Mounting height between drum centre and surface level $h \leq 1.0$ m.
$v < 63$ m/min, $a < 0.3$ m/s²

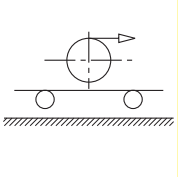

Vertical application (Case 8)
Drum above feeding point, cable unreeled vertically downwards.
Please take note of measure "H".
$v < 30$ m/min, $a < 0.3$ m/s²

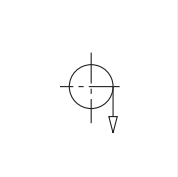

Vertical application (Case 9)
Drum below feeding point, cable unreeled vertically upwards. For drum selection, use the tables for horizontal application.

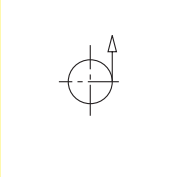

Please contact us for information about all other application cases using the questionnaire on page 7.

Recommendation on cable safety
Attention! Do not reel more cable onto the drum than necessary.
For tension relief, 1 or 2 additional reeling turns ($d \cdot \pi \cdot 2$) which will remain on the drum when the maximum travelling distance has been reached.

Cable selection
When selecting the cable, please take in consideration the cable data and the instructions provided by the manufacturer. In order to make the correct reel selection it is absolutely necessary to know the correct conditions of use. It is important to take in consideration the heating of the cable due to the number of layers on the drum. Also when selecting the cable it is important not to exceed the maximum allowed tension of the cable. The data contained in the selection tables are related to flexible cables of short lengths. The ambient temperature is assumed to be within +30°C to -10°C. Lower temperatures may require a higher spring force due to the higher rigidity of the cable.
The drum selection tables have been calculated with the maximum values (of each bracket) of diameter and weight. Consequently there could be significant deviations in particular cases.
A correlation of the cable diameters is given on page 9.

Reeling cable on drum
It is absolutely necessary to reel the cable onto the drum without twists or bends. To this end, lay out the complete cable straight along the travel length. When reeling the cable on the drum be sure to maintain the same reeling direction used on the wooden drum delivered by the manufacture.

Reeling through roller guides and sheaves
When roller guides and sheaves are used, it is important to avoid reverse bending whenever possible.

Example.

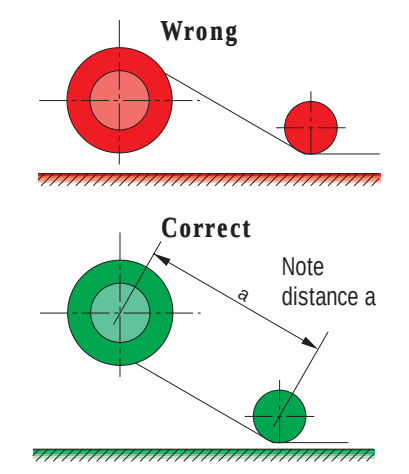

Selection of the cable cross-section
When selecting the cable cross-section it is important to take in consideration the maximum current allowed (thermal heating) and the voltage drop limits, as well as the maximum tension allowed.
The most important factors are:
1. Maximum current load allowed according to norms and/or manufacturer's data.
2. Reduction factors due to duty cycle
3. Ambient temperature
4. Number of cable layers on the drum
   Important:
   The number of layers Lz= 4 should not be exceeded. With Lz > 4 gives higher current reduction and worse reeling conditions. You will find the upper limits in the selection tables.
5. Reduction factor when using multi-core cables.

Relevant values are given by the cable manufacturer.

ALFO range of cables
Our cable range includes a wide variety of flexible cables for reeling applications which will stand the highest mechanical stresses and harsh ambient conditions.

Drum design
Modular hot-dip galvanised steel drum design for all standard ALFO spring reels. Springs made of high-grade spring steel having a long lifetime. The springs can be replaced without removing the drum.

Unreeling direction
Standard direction= left
Standard unreeling direction is anticlockwise, when looking into the slipring body, i.e. to the left when unreeling the cable.

Protection type
Standard for drums and slipring bodies: **IP66**.

Surface treatment
Standard treatment for drums: hot-dip galvanized steel and with slipring assembly housing in glasfiber reinforced polyamid.

Operating voltages
Please find the operating voltages in the respective slipring data tables.

Maximum current values
All drums and slipring bodies are designed for the maximum allowed current values of the cable at 100% ED. (duty cycle). Please find the maximum allowed values in the respective slipring data tables.

Protective earth conductor and number of poles
All drums and slipring bodies for voltages > 24V are manufactured with an un-insulated protective earth conductor (PE).
Number of poles = number of insulated poles including PE.
In your order form, please state: number of poles, protective earth conductor, and operating voltage.

Environmental and extreme operating conditions
Extreme environmental and operating conditions must be given additional attention.
The following factors are of primary importance :

- extreme high and low temperatures
- significant temperature variations
- high air humidity
- strong vibrations
- heavily polluted and aggressive air
- use on the sea or in marine environment

The force of the springs in spring reeling drums, may have to be increased, if:

- the unit is moving at very low speed v < 10 m/min
- significant deflections of the cable is necessary
- at high acceleration and speeds
- the temperature is lower than -10°C.

Warning
When spring reels are mounted low, the cable must always leave the drum from the top. When roller guides or sheaves are used it is important to respect a minimum distance (a) between drum and guide.

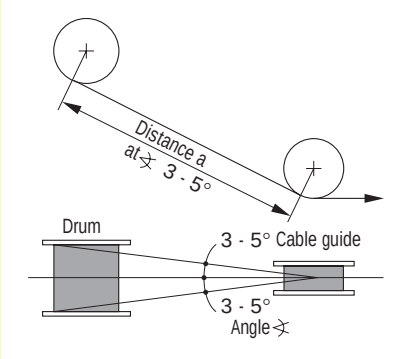

Spring diagram

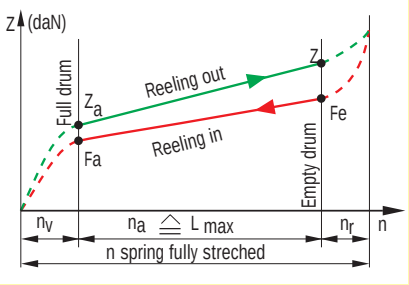

Explanation :
Lmax = *max. operating reeling length (m)*
na = *operational reeling turns*
nv = *spring preload turns*
nr = *extra spare turns*
Fa = *Remaining spring load at full drum*
Fe = *Remaining spring load at empty drum*
Z = *necessary pulling force at vertical application (cable completely unreeled)*
Please note: *Spring forces refers to the corresponding inner drum Ø*

Code key

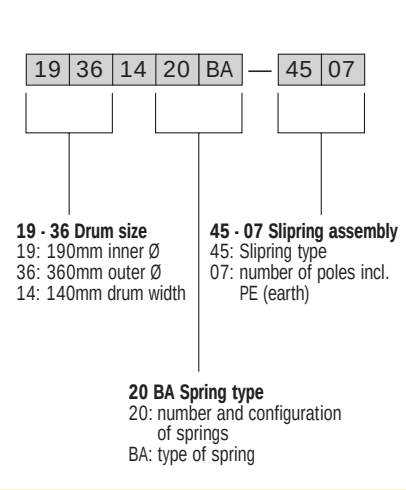

Reel application examples

The following tables show the most common reeling applications, in fact the selection tables are only prepared for case 1 or case 8 and 9. Please contact us concerning all other application cases.

Case 1 - Case 2
Horizontal mobile application

Cable is unreeled on a flat continuous surface. The cable is unreeled horizontally in either travelling directions.

Case 3 - Case 4
Horizontal mobile application

The cable is reeled out on supports (L1 < 1m) or on rollers or rounded smooth supports (L1 = 1 to 3 m, depending on the cable size). The cable is unreeled horizontally in either travelling directions.

Case 5
Stationary application

(cable fixed point on the mobile vehicle) The cable is unreeled from the drum horizontally in either travelling directions through support rollers (L1 = 1 to 3 m, depending on the cable size). This type of application is not recommended.

Case 6 - Case 7
Horizontal mobile application

The cable is unreeled horizontally above the ground and without support in either travelling directions. The catenerary f1 must be calculated accurately. As a rule the value of f_{max} is approx. 10% of L.

Case 8 - Case 9 Vertical application

Cable unreeled vertically downwards or in applications with strong inclination downwards. Cable unreeled vertically upwards or in applications with strong inclination upwards.

Explanation of the symbols (case 1 to 7):

Lw= *maximum reeling cable length [m], (reeling length for reels travelling in both directions = one-half of the total travelling length)*
h= *(installation height) distance between lowest cable end position and drum centre [m]*
LF= *cable feeding point*
f= *maximum cable sag [m], in case 6 and 7 related to position A in drawing*
f1= *maximum cable sag [m], related to cable feeding point LF*
L1= *roller or support distance [m]*

Calculation formula $f/f1\ (m) \sim \frac{10 \times L^2 \times g}{8 \times F}$

L= *support distance [m]*
g= *cable weight [kg/m]*
F= *pulling force [Newton]*

Explanation of the symbols (case 8 and 9):

Lw= *maximum reeling cable length [m],*
$H_{8/9}$= *maximum cable length hanging down from the drum [m]*

The drum is selected according to the total cable weight of the hanging cable. Furthermore, additional weight (F3) must be considered and added to the cable weight.

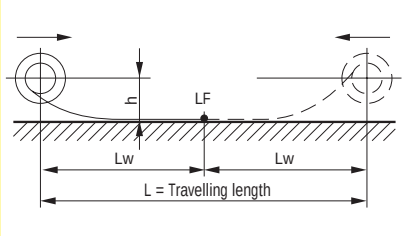

Case 1

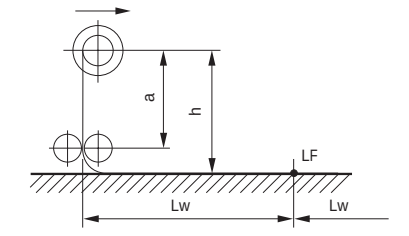

Case 2 – At high h – please note deviation angle

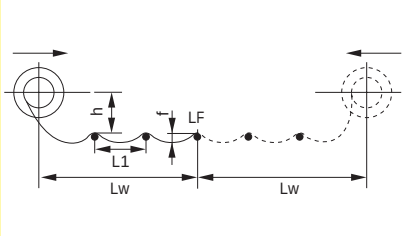

Case 3

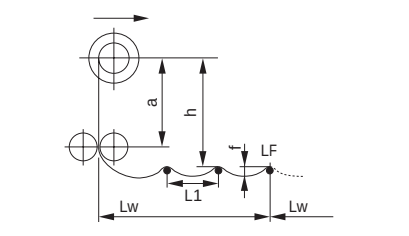

Case 4 – At high h – please note deviation angle

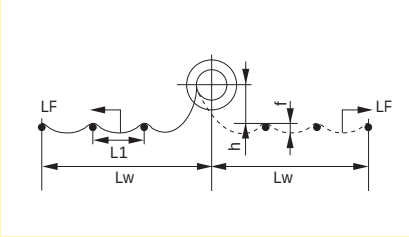

Case 5

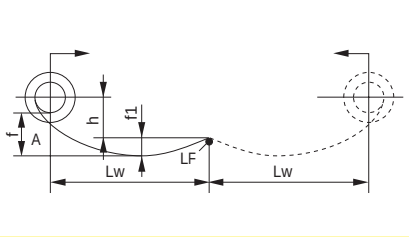

Case 6

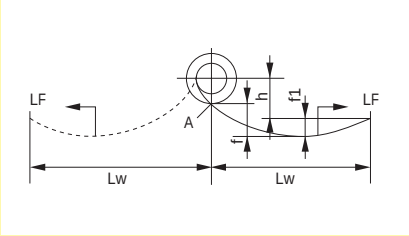

Case 7 – Stationary

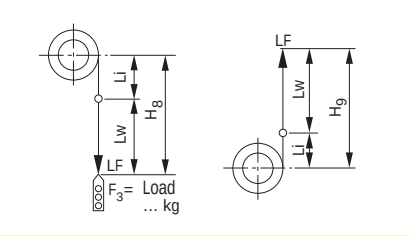

Case 8 – Vertical application – reel on top

Case 9 – Vertical application – reel at bottom

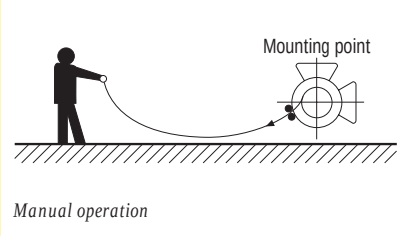

Case 10 – Stationary reel, manually operated

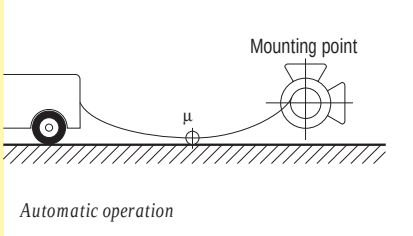

Case 11 – Stationary reel, automatic unreeling
Please give type of ground surface or the surface friction (μ).

Applications type

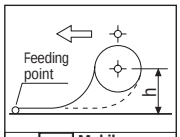

1 ☐ **Mobile application**

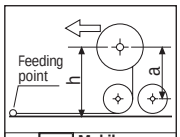

2 ☐ **Mobile application**

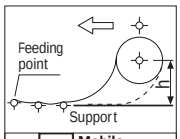

3 ☐ **Mobile application**

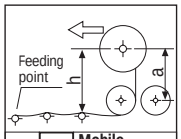

4 ☐ **Mobile application**

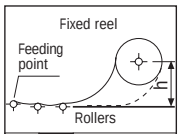

5 ☐ **Stationary application**

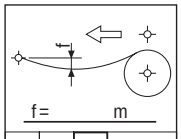

6 7 ☐

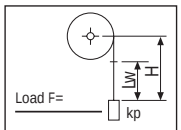

8 ☐ **Vertical downwards**

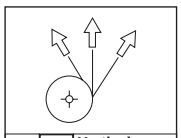

9 ☐ **Vertical upwards**

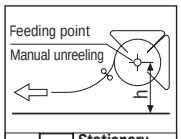

10 ☐ **Stationary application**

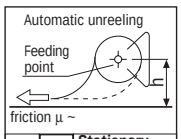

11 ☐ **Stationary application**

From:

Fax:

Tel:

Date: **Inquiry No**

Person in charge:

To: CAVOTEC ALFO

D-51491 Overath

Attention:

Tel: 0049 - (0)2206/60950

Fax: 0049 - (0)2206/609522

Questionnaire for spring-driven cable reels

Quantity: ☐ Delivered with cable ☐ without cable ☐

Cable

Cable type: _____ Cross section: x mm^2, Outside dia ø ☐ mm, Weight ☐ kg/m

Total length of the cable $L_{1,\Sigma}$= ☐ m

($L_{1,\Sigma}$= reeling length + 2 dead turns as tension relief + connections and/or installed cable outside of the cable reel)

Slipring collector

Number of isolated poles ☐ + earth conductor yes ☐ no ☐

Current min. ☐ mA, max ☐ A, Voltage min/max. ☐ / ☐ V,

Mounting

Horizontal track length L= ☐ m, of which travel distance Lw= ☐ m

Installation height h= ☐ m, roller guide yes ☐ no ☐ Distance a= ☐ m

In case that "h" is < 0,6m the cable should always run off the cable reel from the top.

Applications type

Horizontal

electrical end supply ☐ electrical supply at centre ☐ of which travel distance L_{w1}= ☐ m L_{w2}= ☐ m

Vertical

vertical hoist height H= ☐ m hoist distance Lw= ☐ m additional load F= ☐ kg

travel hoist speed v= ☐ m/min acceleration b= ☐ m/s^2

Special requirement

Automatic operation ☐ manual operation ☐ return locking only manual operation ☐ application outdoors ☐ indoors ☐

temp. -- / + °C wide drum ☐ monospiral reel ☐ hot-dip galvanised + polyester coating ☐

marine environment ☐ high number of operations ☐ operations/per year ☐ strong vibration ☐ dusty air ☐

humidity ☐ % other: _____

Direction of unreeling (seen from slipring unit)

standard anticlockwise ☐ clockwise ☐

sketch (please fill in, important): max. installation dimensions: Ø = ☐ mm total width: ☐ mm

Note

Standard Spring Cable Reels
Dimensions and weights

The standard range of ALFO spring reels are only a limited part of the total ALFO range. The standard range still covers a large spectrum of applications and requirements. All standard spring reels are made of hot dip galvanised steel and are designed for heavy duty. Drum and slipring assembly have protection IP65/66. Each reel is supported by two roller bearings on a strong self supporting shaft.

Springs are made of special high- grade steel ensuring strong force and long lifetime. The sliprings housing (up to ø 245), made in strong glassfiber reinforced plastic material, is water- and weather proof.
Technical data of the slipring assemblies are found in the tables type 190 to 500.

ALFSR004

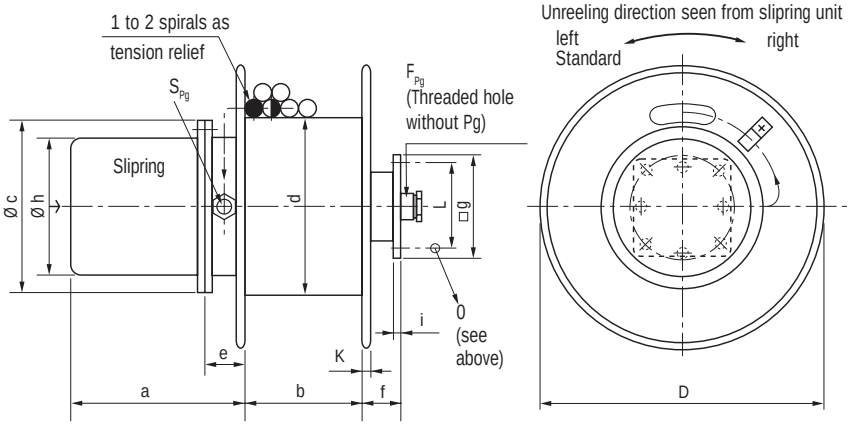

Mounting flange:

Type 190/220/280:	Two hole diameters with 4 holes each Ø 100 - 4x13 Ø Ø 125 - 4x11 Ø in the corners
Type 400/500:	Hole diameter Ø 140-180 4x17 Ø in the corners
Needed free space for:	F Pg 21= Ø 40, F Pg 29=min. Ø 50, F Pg 36 = min Ø 60, F Pg 42 = min Ø 70 mm.

CAVOTEC ALFO spring reel range - type 125 to 500

In the following tables (page 10 to 25) you will find the ALFO range of spring cable reels for reeling on wide drums. The range is constantly enlarged to comprise all new market requirements. All other versions of spring reels, such as hose reels, monospiral reels, flat cable reels, special reels etc. are to be found in separate catalogues and data sheets.
Our 25 year experience in the field of spring driven reels guarantees the highest quality in product and service. Please contact us with your requests - we will be proud to serve you.

New - we would like to introduce.
A new generation reeling cables featuring high axial tension. These cables also have a significantly reduced diameter and weight which yields smaller reels and more economic solutions.

New special reeling cables

Special reeling cable NSHT-Special Cross sec.	kg/m	Ø (mm)	Max. allowed tension N
4 x 1,5	0,14	10,2	400
5 x 1,5	0,16	10,8	700
7 x 1,5	0,19	12,9	2200
12 x 1,5	0,34	16,8	2500
18 x 1,5	0,48	18,6	2500
24 x 1,5	0,66	21,3	2500
30 x 1,5	0,77	24,6	2500
36 x 1,5	0,9	25,4	2200
42 x 1,5	1,06	26,5	2500
4 x 2,5	0,2	11,7	500
5 x 2,5	0,24	12,7	800
7 x 2,5	0,32	14,8	2300
12 x 2,5	0,47	18,4	2500
18 x 2,5	0,69	21,1	2500
24 x 2,5	0,94	24,8	2500
30 x 2,5	1,09	27,6	2500
36 x 2,5	1,30	28,2	2500
50 x 2,5	1,80	34,7	2500
4 x 4	0,27	12,5	600
5 x 4	0,33	14,3	900
4 x 6	0,41	16,9	900
5 x 6	0,42	17,8	1500
7 x 6	0,63	20,9	1800
4 x 10	0,63	19,6	2200
5 x 10	0,79	20,9	2500
4 x 16	0,94	23,8	2500
5 x 16	1,2	25,5	2500
4 x 25	1,4	27,7	2500
4 x 35	1,99	32,4	2500
4 x 50	2,68	34,9	2500

Spring cable reel type 125

Choice of cable reel according to Search key 1 and 2.

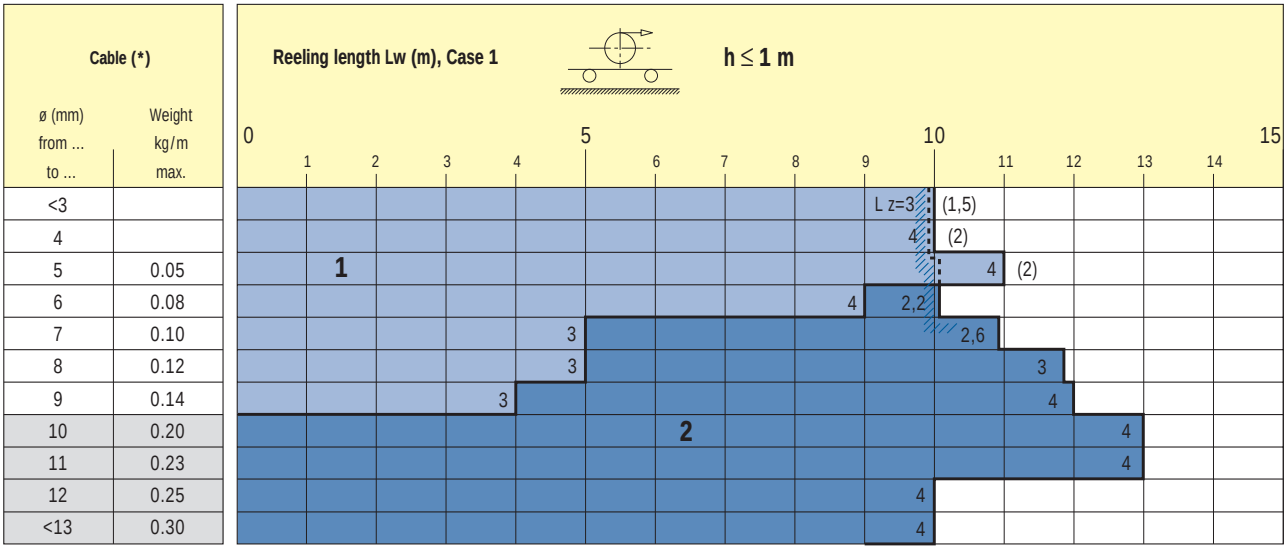

L z= N° of layers
= Grey background: Diameter of axis hole is 9mm

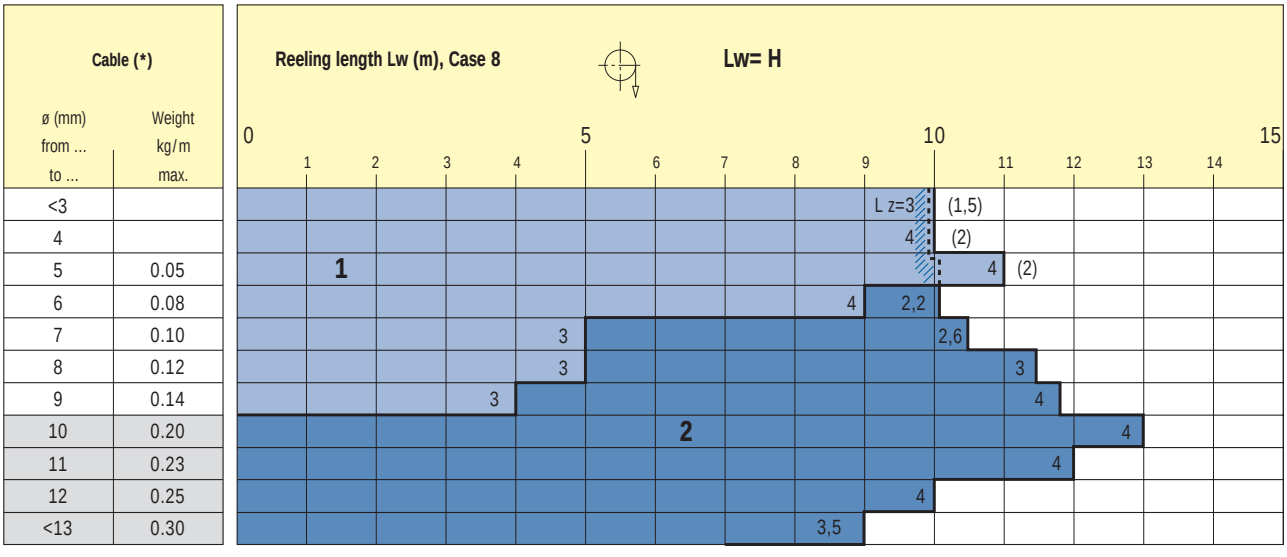

L z= N° of layers
= Grey background: Diameter of axis hole is 9mm

(*) The correct cable data are given by each cable manufacturer and should be compared with the values in the tables.
For vertical applications the cable weight (kg/m) and additional load must be considered. Always check actual reeling length when near capacity limits.

Type 125

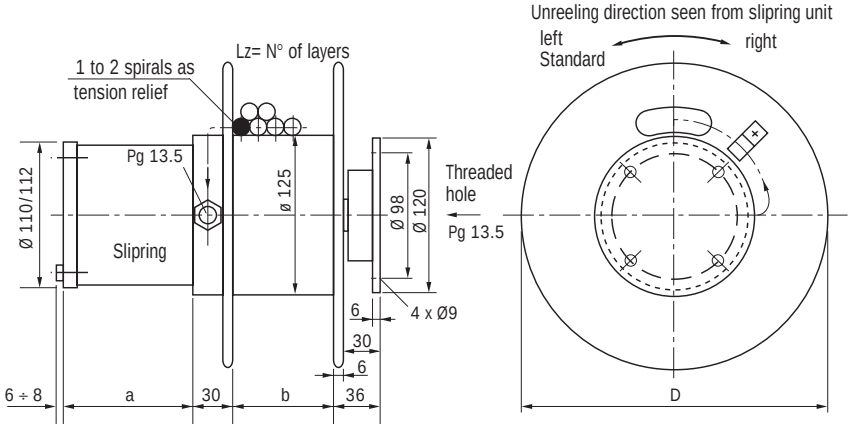

Technical data:
Drum in hot-dip galvanised steel.
Two bearings on each side in aluminium housings.
Springs are made of high-grade steel for long lifetime.
Slipring housing in strong glassfiber reinforced plastic material.
Protection: IP55
Axis hole Slipring Type 30: ø 9 mm
Axis hole Slipring Type 58: ø 11 mm

Special dimensions
b = 70
D = 220

Search key	Drum type	Slipring type	Dimensions (mm) d ø	Dø	b	Spring force (daN) Za	Fa	Fe	Z	Number of spring turns n vor	n Res.	n turns	Weight (kg)
1	**12180410AA –**	30	125	180	36	0,8	0,7	2,2	2,6	2 u.>	1	30	3,6
2	**12240812AA –**		125	240	80	1,6	1,4	4,3	5,2	2 u.>	1	30	4,8
Special	**12240410AA –**	58	125	240	36	0,8	0,7	2,2	2,6	2 u.>	1	30	3,8
Special	**12180812AA –**		125	180	80	1,6	1,4	4,3	5,2	2 u.>	1	30	4,6

Technical data for Sliprings

Drum type	Slipring type	N° of poles	Current 100% ED, max. A	Cross sec mm²	Max. voltage V	Housing Ø (mm)
12...–	◤ **30**	10	16	1,5	380	110
	◤ **58**	12	16	1,5	125/380/500	110

Housing dimensions

Dimension a – Standard depth of housing in relations to N° of poles												PG– hole on housing
Poles	Dim.	Poles	Dim.	Poles	Dim.	Poles	Dim.	Poles	Dim.	Poles	Dim.	
3	80	4	90	5	105	6	120	7	130	10	165	13,5
4/–/–		6/4/–		8/6/4		12/10/8		–/12/10		–/–/12	140	13,5

Slipring type	Standard rings and brushes	Multi layer silverplating and silver brushes
30	50 m A < at 24 V, max 16A, 380V	
58	30 m A < at 24 V, max 16A, 500V	Video signals and Data signals

◤ *Sliprings connected to cable terminals*

Spring cable reel type 190

Choice of cable reel according to Search key 1.1 to 3.10.

Reeling length Lw (m), Case 1 — **h ≤ 1 m**

Cable (*) ø (mm) from ... to ...	Weight kg/m max.	1	2	3	4	5	6	7	8	9	10	11	12	13	14	15	16	17	18	19	20	21	22	23	24	25	26	27	28	29	30
<8	0.09							L z=1										2										2,8			
8 - 10	0.15							1				2,5						2,4			3,9								3,5		
10 - 12	0.25							1,4											2,8											4,2	
12 -14	0.30				1,1			1,7									2,7	2,6		3,5									5		
14 - 16	0.40								1,9						2,7						4		4,2								
16 - 18	0.45								2											4											
18 - 20	0.55						2																								

L z= N° of layers

= Grey background: Diameter of axis hole is 15mm

Reeling length Lw (m), Case 8 — **Lw= H**

Cable (*) ø (mm) from ... to ...	Weight kg/m max.	1	2	3	4	5	6	7	8	9	10	11	12	13	14	15	16	17	18	19	20	21	22	23	24	25	26	27	28	29	30
<8	0.09							L z=1										2						3,9				2,8			
8 - 10	0.15							1					2,5					2,4										3,5			
10 - 12	0.25							1,4										2,7			3										
12 -14	0.30				1,1			1,7							2,7	3,10					3,8										
14 - 16	0.40								1,9			2,8		2,7					3,9												
16 - 18	0.45								2					3,1			3,8														
18 - 20	0.55						2				3																				

L z= N° of layers

= Grey background: Diameter of axis hole is 15mm

ALFSR010

(*) The correct cable data are given by each cable manufacturer and should be compared with the values in the tables.
For vertical applications the cable weight (kg/m) and additional load must be considered. Always check actual reeling length when near capacity limits.

Type 190

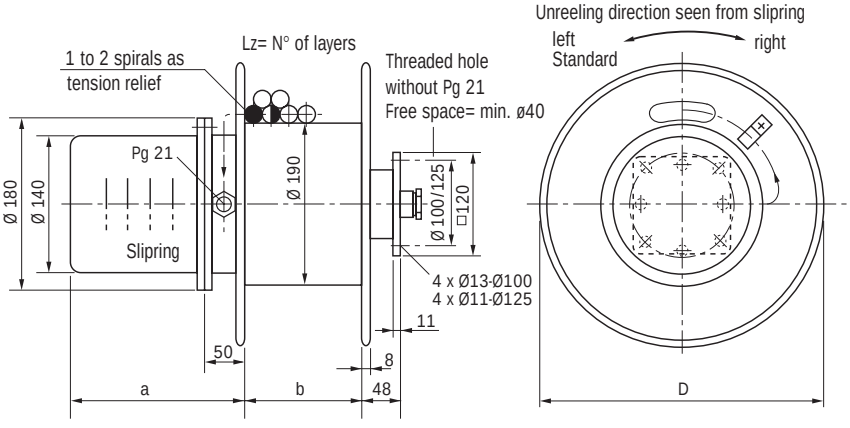

Technical data:
Drum in hot-dip galvanised steel.
Two bearings on each side of axis.
Springs are made of high-grade steel for long lifetime and mounted in separate housing.
Slipring housing in strong glassfiber reinforced plastic material.
Protection: IP65/66
Axis hole: ø 15 mm

Special dimensions
b = 110/ 180/ 215

Search key	Drum type	Slipring type	Dimensions (mm) d ø	Dø	b	Spring force (daN) Za	Fa	Fe	Z	Number of spring turns n vor	n Res.	n turns	Weight (kg)
1.1	**19291410BA –**	45	190	290	136	3,4	2,9	6,8	7,8	3	1	17,5	10,0
2.5	**19291420BA –**	46	190	290	136	3,4	2,9	6,8	7,8	6	2	35	12,5
2.6	**19331420BA –**	47	190	330	136	3,4	2,9	6,8	7,8	6	2	35	13,1
2.7	**19361420BA –**	58	190	360	136	3,4	2,9	6,8	7,8	6	2	35	13,7
2.8	**19361420DA –**		190	360	136	5,0	3,7	11,0	12,0	4	2	26	15,0
3.9	**19361430BA –**	Special	190	360	136	3,4	2,9	6,8	7,8	9	3	53	15,8
3.10	**19361430DA –**		190	360	136	5,0	3,7	11,0	12,0	6	3	39	18,0

Technical data for Sliprings

Drum type	Slipring type	N° of poles	Current 100% ED, max. A	Cross sec mm²	Max. voltage V	Housing Ø (mm)
19...–	◤ **45**	18	25	(2,5²)	415	140
	◤ **46**	5	25	(4²)	415	140
	◤ **47**	5	50	(6²)	500	140
	◤ **58**	24	16	(1,5²)	125/380/500	140

Haubenmaße

Dimension a – Standard depth of housing in relations to N° of poles: Poles	Dim.	Poles	Dim.	Poles	Dim.	Poles	Dim.	Poles	Dim.	PG – hole in housing
4	130	5	150	8	190	12	245	18	325	16 21
4	130	5	150	—	—	—	—	—	—	16 21
3	130	4	150	5	190	—	—	—	—	21
8/8/6	130	12/10/8	150	22/18/14	190	24/24/24	245	—	—	16 21

Slipring type	Standard rings and brushes		Multi layer silverplating and silver brushes
45	50 m A < at 24 V and over max. 25 A, 415 V		—
58	30 m A < at 24 V and over max 16 A, 500 V		Video signals and Data signals

◤ *Sliprings connected to cable terminals*
For size 58 only up to 24 poles

Standard model

Spring cable reel type 220

Choice of cable reel according to Search key 1.1 to 4.13.

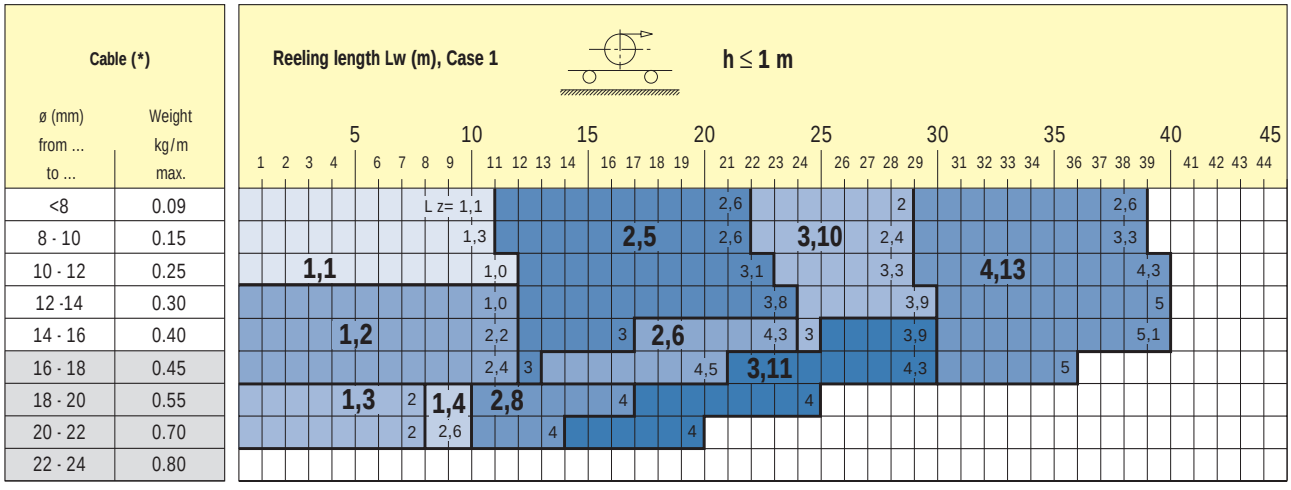

L z= N° of layers

= Grey background: Diameter of axis hole is 15mm

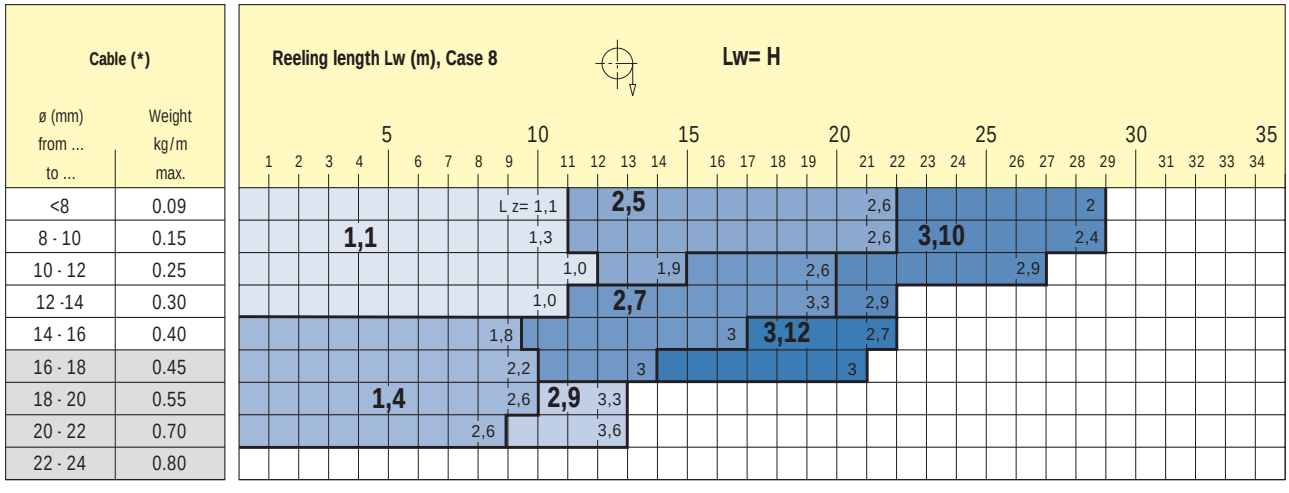

L z= N° of layers

= Grey background: Diameter of axis hole is 15mm

(*) The correct cable data are given by each cable manufacturer and should be compared with the values in the tables.
For vertical applications the cable weight (kg/m) and additional load must be considered. Always check actual reeling length when near capacity limits.

Type 220

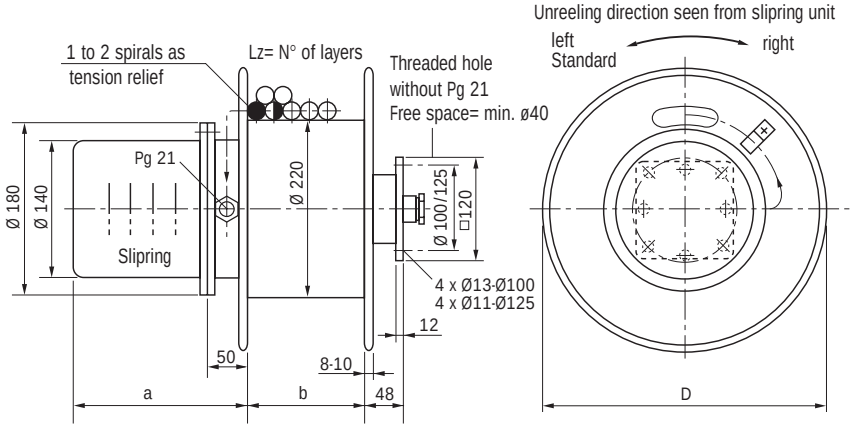

Technical data:
Drum in hot-dip galvanised steel.
Two bearings on each side of axis.
Springs are made of high-grade steel for long lifetime and mounted in separate housing.
Slipring housing in strong glassfiber reinforced plastic material.
Protection: IP65/66
Axis hole: ø 15 mm

Special dimensions
b = 215

Search key	Drum type	Slipring type	Dimensions (mm) d ø	Dø	b	Spring force (daN) Za	Fa	Fe	Z	Number of spring turns n vor	n Res.	n turns	Weight (kg)
1.1	**22301410BC –**	45	220	300	136	2,5	2,4	5,8	6,1	3	1,5	20,5	12
1.2	**22361410BC –**		220	360	136	2,5	2,4	5,8	6,1	3	1,5	20,5	12,6
1.3	**22361410DC –**		220	360	136	3,5	3,3	10,3	10,8	2	1,5	16,5	12,8
1.4	**22431410DC –**		220	430	136	3,5	3,3	10,3	10,8	2	1,5	16,5	13
2.5	**22361420BC –**	46	220	360	136	3	2,7	5,8	6,1	8	3	41	14,7
2.6	**22431420BC –**		220	430	136	3	2,7	5,8	6,1	8	3	41	15
2.7	**22361420DC –**	47	220	360	136	3,5	3,3	10,3	10,8	4	3	33	15
2.8	**22431420DC –**		220	430	136	3,5	3,3	10,3	10,8	4	3	33	16
2.9	**22431420EB –**		220	430	136	6,1	5,7	14,5	15	5	2	25	18
3.10	**22361830DC –**	58	220	360	180	3,5	3,3	10,3	10,8	6	4,5	49,5	19,5
3.11	**22431830DC –**		220	430	180	3,5	3,3	10,3	10,8	6	4,5	49,5	20
3.12	**22431830EB –**	Special	220	430	180	6,1	5,7	14,5	15	7,5	3	37,5	22
4.13	**22431840DC –**		220	430	180	3,5	3,3	10,3	10,8	8	6	66	25
4.14	**22431840EB –**		220	430	180	6,1	5,7	14,5	15	10	4	50	30

Technical data for Sliprings

Drum type	Slipring type	N° of poles	Current 100% ED, max. A	Cross sec mm²	Max. voltage V	Housing Ø (mm)
22...-	◤ **45**	18	25	2,5	415	140
	◤ **46**	5	25	4	415	140
	◤ **47**	5	50	6	500	140
	◤ **58**	24	16	1,5	125/380/500	140

Housing dimensions

Dimension a – Standard depth of housing in relations to N° of poles										PG– hole on housing
Poles	Dim.	Poles	Dim.	Poles	Dim.	Poles	Dim.	Poles	Dim.	
4	130	5	150	8	190	12	245	18	325	16-21
4	130	5	150	—	—	—	—	—	—	12-21
3	130	4	150	5	190	—	—	—	—	21
8/8/6	130	12/10/8	150	22/18/14	190	24/24/24	245	—	—	16-21

Slipring type	Standard rings and brushes		Multi layer silverplating and silver brushes
45	50 m A < at 24 V and over max. 25 A, 415 V		—
58	30 m A < at 24 V and over max 16 A, 500 V		Video signals and Data signals

◤ *Sliprings connected to cable terminals*
For size 58 only up to 24 poles

Standard model

Spring cable reel type 280

Choice of cable reel according to Search key 1.1 to 5.19.

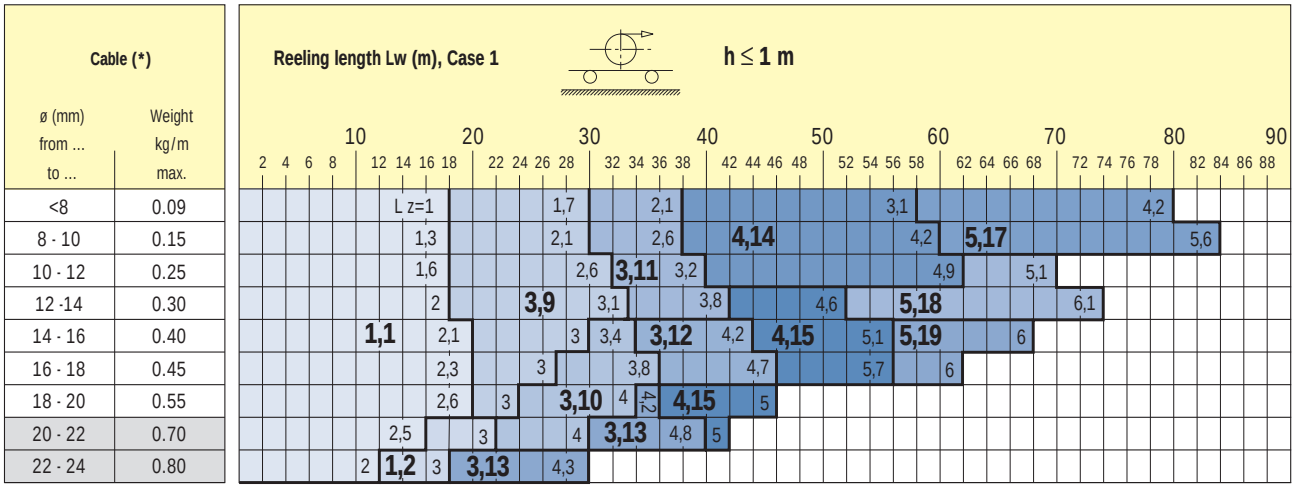

L z= N° of layers

= Grey background: Diameter of axis hole is 20mm

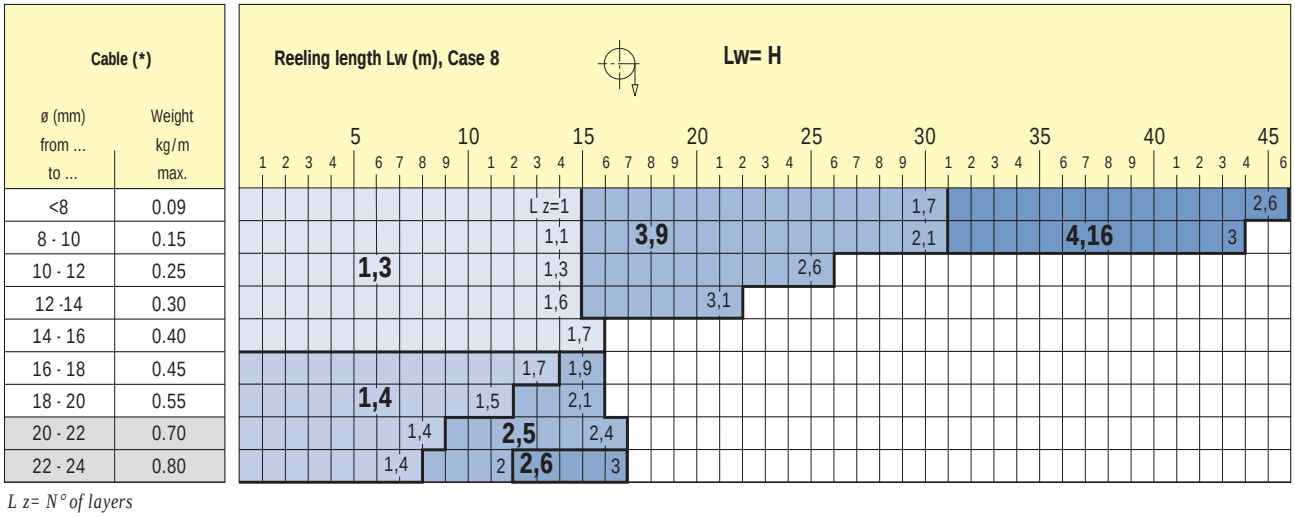

L z= N° of layers

= Grey background: Diameter of axis hole is 20mm

Technische Daten der Schleifringkörper

Slipring type	Standard rings and brushes		Multi layer silverplating and silver brushes
02	50 m A < at 24 V <, max. 50 A, 500 V		—
45	50 m A < at 24 V and over max. 25 A, 415 V		—
58	30 m A < at 24 V and over max. 16 A, 500 V		Video signals and Data signals
98	50 m A < at 24 V max. 20 A, 500 V		1 m A < at 10 mV and over

(*) The correct cable data are given by each cable manufacturer and should be compared with the values in the tables.
For vertical applications the cable weight (kg/m) and additional load must be considered. Always check actual reeling length when near capacity limits.

Type 280

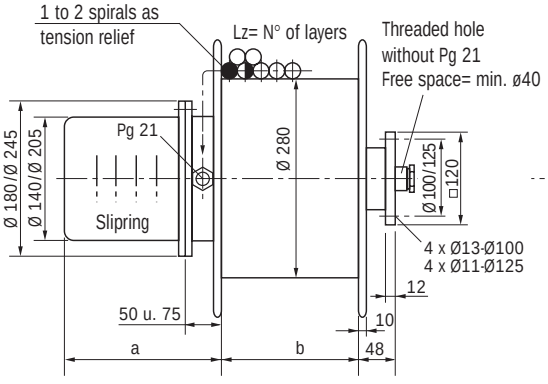

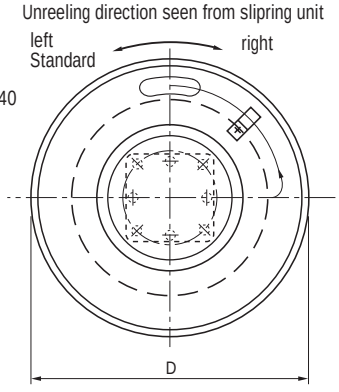

Technical data:
Drum in hot-dip galvanised steel.
Two bearings on each side of axis.
Springs are made of high-grade steel for long lifetime and mounted in separate housing.
Slipring housing in strong glassfiber reinforced plastic material.
Protection: IP65/66
Axis hole: ø 20 mm

Special dimensions b = 136/ 215/ 250, D = 460

Search key	Drum type	Slipring type	Dimensions (mm) d ø	Dø	b	Spring force (daN) Za	Fa	Fe	Z	Number of spring turns n vor	n Res.	n turns	Weight (kg)
1.1	**28431810DB —**		280	430	180	3,0	2,5	7,0	9,0	3	1,0	25,0	21,0
1.2	**28501810DB —**		280	500	180	3,0	2,5	7,0	9,0	3	1,0	25,0	22,0
1.3	**28361810EA —**	02	280	360	180	4,5	4,0	10,0	12,0	3	1,5	21,5	21,0
1.4	**28431810EA —**		280	430	180	4,5	4,0	10,0	12,0	3	1,5	21,5	21,5
2.5	**28431812EA —**	03	280	430	180	9,0	8,0	20,0	24,0	3	1,5	21,5	26,0
2.6	**28501812EA —**		280	500	180	9,0	8,0	20,0	24,0	3	1,5	21,5	27,0
3.9	**28431820EA —**	45	280	430	180	4,5	4,0	10,0	12,0	6	3,0	43,0	26,0
3.10	**28501820EA —**		280	500	180	4,5	4,0	10,0	12,0	6	3,0	43,0	27,0
3.11	**28431820DB —**	46	280	430	180	3,0	2,5	7,0	9,0	6	2,0	50,0	27,0
3.12	**28501820DB —**		280	500	180	3,0	2,5	7,0	9,0	6	2,0	50,0	28,0
3.13	**28551820EA —**	47	280	550	180	4,5	4,0	10,0	12,0	6	3,0	43,0	28,0
4.14	**28431830DB —**		280	430	180	3,0	2,5	7,0	9,0	9	3,0	75,0	30,0
4.15	**28551830EA —**	58	280	550	180	4,5	4,0	10,0	12,0	9	4,5	64,5	32,5
4.16	**28431830EA —**		280	430	180	4,5	4,0	10,0	12,0	9	4,5	64,5	31,0
5.17	**28431840DB —**	98	280	430	180	3,0	2,5	7,0	9,0	12	4,0	100,0	34,5
5.18	**28501840EA —**		280	500	180	4,5	4,0	10,0	12,0	12	6,0	86,0	36,5
5.19	**28551840EA —**		280	550	180	4,5	4,0	10,0	12,0	12	6,0	86,0	37,0

Technical data for Sliprings

Drum type	Slipring type	N° of poles	Current 100% ED, max. A	Cross sec mm²	Max. voltage V	Housing Ø (mm)
28...-	**02**	7	50	max 10^2	500	205/245
	03	5	90	max 16^2	500	205/245
	◤ **45**	18	25	($2,5^2$)	415	140/180
	◤ **46**	5	25	(4^2)	415	140/180
	◤ **47**	5	50	(6^2)	500	140/180
	◤ **58**	24	16	($1,5^2$)	125/380/500	140/180
	◤ **98**	36	20	($2,5^2$)	500	205/245

Housing dimensions

Dimension a Standard depth of housing in relations to N° of poles: Poles	Dim.	Poles	Dim.	Poles	Dim.	Poles	Dim.	Poles	Dim.	Poles	Dim.	Poles	Dim.	PG– hole on housing
—	—	7	205	—	—	—	—	—	—	—	—	—	—	21 29, (36)
—	—	6	205	—	—	—	—	—	—	—	—	—	—	21 29, (36)
4	130	5	150	8	190	—	—	12	245	—	—	18	325	16 21
4	130	5	150	—	—	—	—	—	—	—	—	—	—	16 21
3	130	4	150	5	190	—	—	7	245	—	—	—	—	21
8 8 6	130	12 10 8	150	22 18 14	190	—	—	24	245	—	—	—	—	16 21
—	—	12	205	24	295	24	295	36	385	—	—	—	—	21 29, (36)

◤ *Sliprings connected to cable terminals*
For size 58 only up to 24 poles

Standard model

Spring cable reel type 280 HA (with higher spring force)

Choice of cable reel according to Search key 1.5 to 6.22.

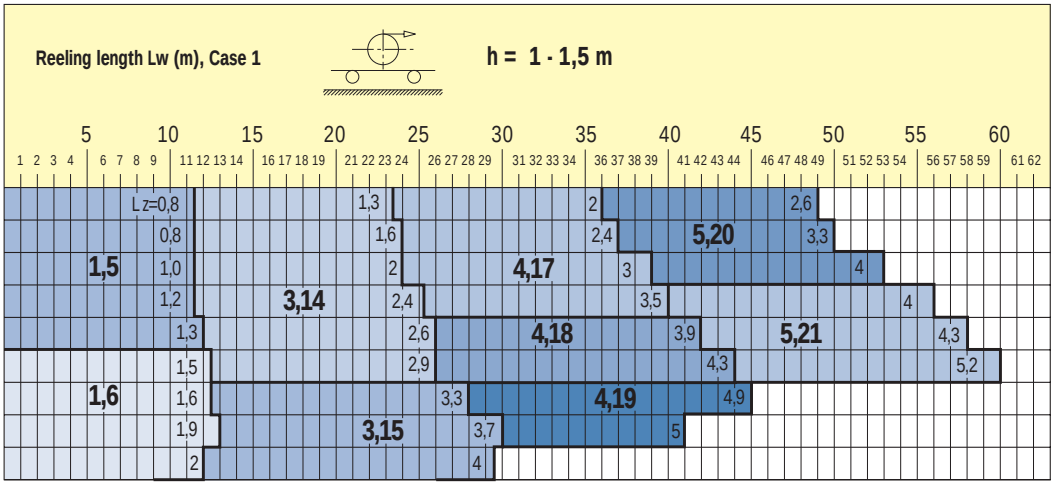

L z= N° of layers

= Grey background: Diameter of axis hole is 20mm

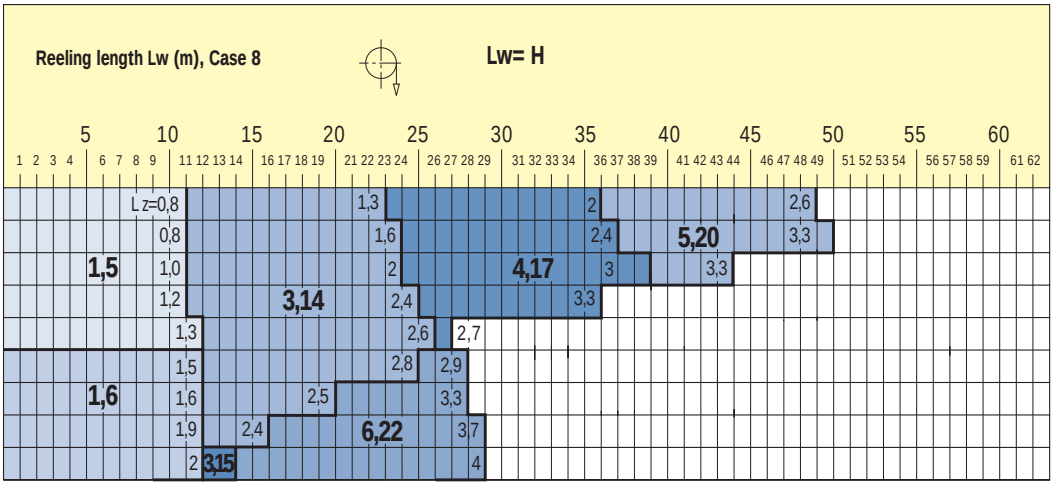

L z= N° of layers

= Grey background: Diameter of axis hole is 20mm

Technical data for Sliprings

Slipring type	Standard rings and brushes		Multi layer silverplating and silver brushes
02	50 m A < at 24 V <, max. 50 A, 500V		—
45	50 m A < at 24 V and over max. 25 A, 415 V		—
58	30 m A < at 24 V and over max. 16 A, 500 V		Video signals and Data signals
98	50 m A < at 24 V max. 20 A, 500 V		1 m A < at 10 mV and over

(*) The correct cable data are given by each cable manufacturer and should be compared with the values in the tables. For vertical applications the cable weight (kg/m) and additional load must be considered. Always check actual reeling length when near capacity limits.

Type 280 HA

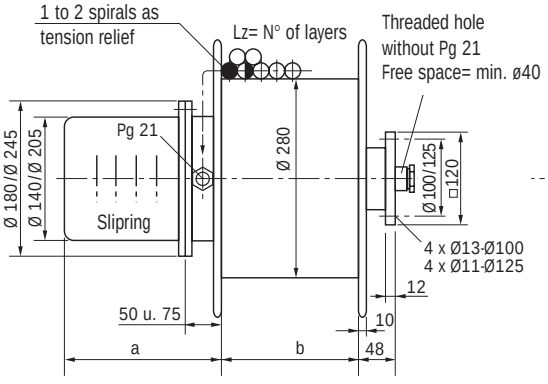

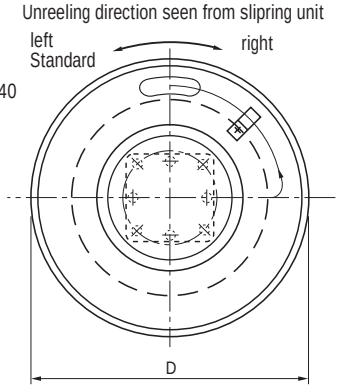

Special dimensions b= 136/ 215/ 250, D = 460

Technical data:
Drum in hot-dip galvanised steel.
Two bearings on each side of axis.
Springs are made of high-grade steel for long lifetime and mounted in separate housing.
Slipring housing in strong glassfiber reinforced plastic material.
Protection: IP65/66
Axis hole: ø 20 mm

The reels of type 280 HA have springs with higher spring force and should be used in special and heavy-duty applications. For example in cases where speed is very low, or where the cable is guided through guiding systems with high friction losses, or in extremely low or high ambient temperature.

	Drum	Slipring	Dimensions (mm)			Spring force (daN)				Number of spring turns			Weight
Search key	type	type	d ø	Dø	b	Za	Fa	Fe	Z	n vor	n Res.	n turns	(kg)
1.5	**28361810HA –**		280	360	180	7,1	6,8	17,5	19	3	1,5	17,5	21,5
1.6	**28431810HA –**	02	280	430	180	7,1	6,8	17,5	19	3	1,5	17,5	21,8
3.14	**28431820HA –**	03	280	430	180	7,1	6,8	17,5	19	6	3	35	28
3.15	**28551820HA –**	45	280	550	180	7,1	6,8	17,5	19	6	3	35	29
4.17	**28431830HA –**	46	280	430	180	7,1	6,8	17,5	19	9	4,5	52,5	32
4.18	**28501830HA –**	47	280	500	180	7,1	6,8	17,5	19	9	4,5	52,5	32,5
4.19	**28551830HA –**	58	280	550	180	7,1	6,8	17,5	19	9	4,5	52,5	33
5.20	**28431840HA –**	98	280	430	180	7,1	6,8	17,5	19	12	6	70	38
5.21	**28552140HA –**		280	550	215	7,1	6,8	17,5	19	12	6	70	39
6.22	**28551822HA –**		280	550	180	14	13,5	35	38	6	3	35	39

Technical data for Sliprings

Drum	Slipring					Housing
type	type	N° of poles	Current 100% ED, max. A	Cross sec mm²	Max. voltage V	Ø (mm)
28...–	**02**	7	50	max 10^2	500	205/245
	03	5	90	max 16^2	500	205/245
	◤ **45**	18	25	($2,5^2$)	415	140/180
	◤ **46**	5	25	(4^2)	415	140/180
	◤ **47**	5	50	(6^2)	500	140/180
	◤ **58**	24	16	($1,5^2$)	125/380/500	140/180
	◤ **98**	36	20	($2,5^2$)	500	205/245

◤ *Sliprings connected to cable terminals*
For size 58 only up to 24 poles

Housing dimensions

Dimension a Standard depth of housing in relations to N° of poles														PG– hole
Poles	Dim.	Poles	Dim.	Poles	Dim.	Poles	Dim.	Poles	Dim.	Poles	Dim.	Poles	Dim.	on housing
—	—	7	205	—	—	—	—	—	—	—	—	—	—	21 29, (36)
—	—	6	205	—	—	—	—	—	—	—	—	—	—	21 29, (36)
4	130	5	150	8	190	—	—	12	245	—	—	18	325	16 21
4	130	5	150	—	—	—	—	—	—	—	—	—	—	16 21
3	130	4	150	6	190	—	—	7	245	—	—	—	—	21
8 8 6	130	12 10 8	150	22 18 14	190	—	—	24	245	—	—	—	—	16 21
—	—	12	205	24	295	24	295	36	385	—	—	—	—	21 29, (36)

Standard model

Spring cable reel type 400

Choice of cable reel according to Search key 1.1 to 5.21.

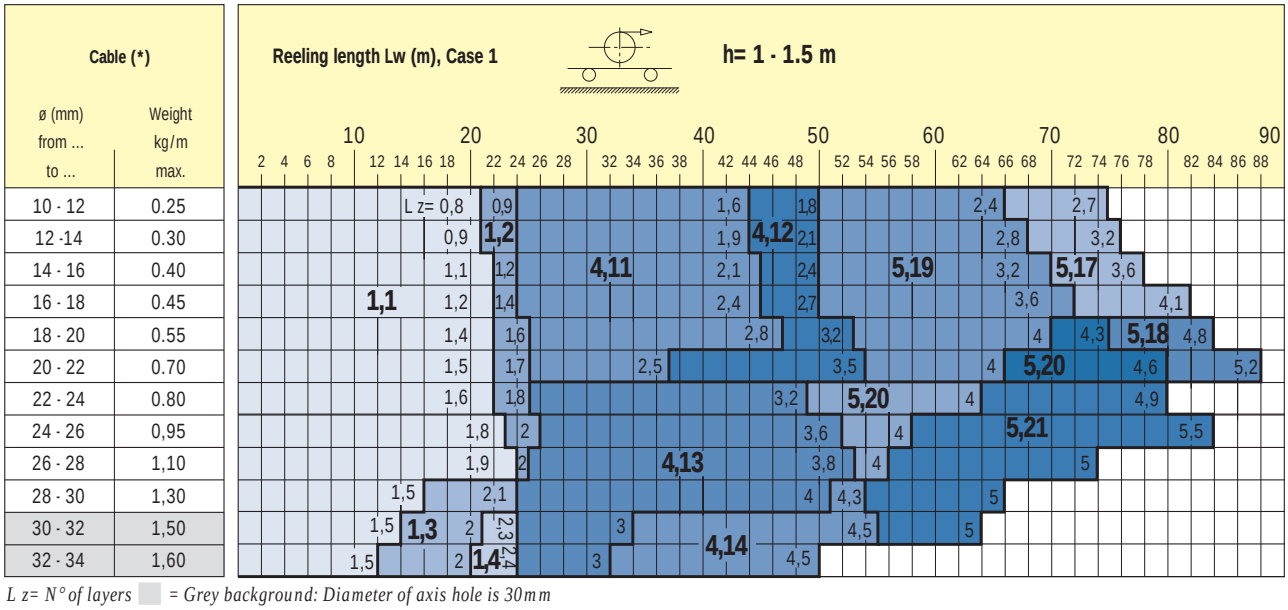

L z= N° of layers = *Grey background: Diameter of axis hole is 30mm*

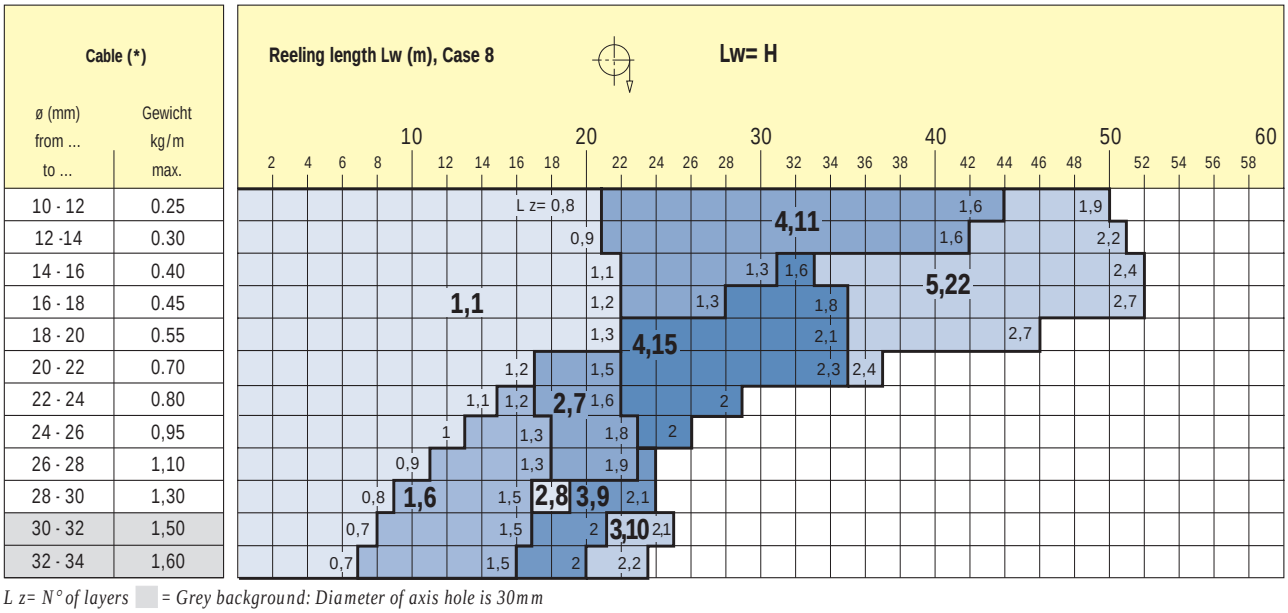

L z= N° of layers = *Grey background: Diameter of axis hole is 30mm*

Technical data for Sliprings

Slipring type	Standard rings and brushes		Multi layer silverplating + Goldplated and silver brushes
02	50 m A < at 24 V < max. 50 A, 500 V		—
45	50 m A < at 24 V and over max. 25 A, 415 V		—
80	30 m A < at 24 V and over max. 16 A, 500 V		Video signals and Data signals
98	50 m A < at 24 V max. 20A, 500V		1 m A < at 10 mV and over

(*) The correct cable data are given by each cable manufacturer and should be compared with the values in the tables.
For vertical applications the cable weight (kg/m) and additional load must be considered. Always check actual reeling length when near capacity limits.

Type 400

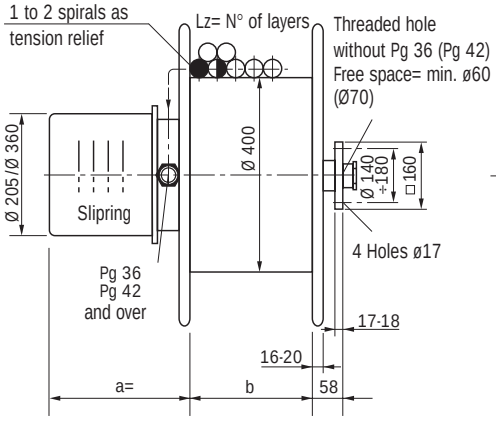

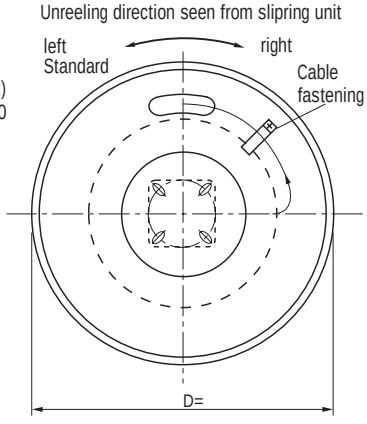

Technical data:
Drum in hot-dip galvanised steel.
Two bearings on each side of axis.
Springs are made of high-grade steel for long lifetime and mounted in separate housing.
Slipring housing in strong glassfiber reinforced plastic material.
Protection: IP65/66
Axis hole: ø 30 mm

Special dimensions b = 215/ 340/ 150

Search key	Drum type	Slipring type	Dimensions (mm) d ø	Dø	b	Spring force (daN) Za	Fa	Fe	Z	Number of spring turns n vor	n Res.	n turns	Weight (kg)
1.1	40562810TA –		400	560	280	7	6	20	24	2,5	1,5	21	54
1.2	40562810SA –		400	560	280	6	5	13	15	3,5	1,5	25	52
1.3	40632810TA –		400	630	280	7	6	20	24	2,5	1,5	21	56
1.4	40712810TA –		400	710	280	7	6	20	24	2,5	1,5	21	58
1.6	40632810UA –	02	400	630	280	16	13	39	46	2,5	1,0	16,5	59
2.7	40562812TA –	03	400	560	280	14	12	40	48	2,5	1,5	21	68
2.8	40632812TA –		400	630	280	14	12	40	48	2,5	1,5	21	70
3.9	40632813TA –	05	400	630	280	21	18	60	72	2,5	1,5	21	83
3.10	40712813TA –	09	400	710	280	21	18	60	72	2,5	1,5	21	84
4.11	40562820TA –		400	560	280	7	6	20	24	5	3	42	68
4.12	40632820SA –	(45)	400	630	280	6	5	13	15	7	3	50	65
4.13	40712820TA –		400	710	280	7	6	20	24	5	3	42	72
4.14	40802820TA –		400	800	280	7	6	20	24	5	3	42	75
4.15	40562820UA –	(58)	400	560	280	16	13	39	46	5	2	33	74
5.17	40632830SA –		400	630	280	6	5	13	15	10,5	4,5	75	75
5.18	40712830SA –	98	400	710	280	6	5	13	15	10,5	4,5	75	78
5.19	40632830TA –		400	630	280	7	6	20	24	7,5	4,5	63	83
5.20	40712830TA –		400	710	280	7	6	20	24	7,5	4,5	63	84
5.21	40802830TA –		400	800	280	7	6	20	24	7,5	4,5	63	86
5.22	40632830UA –		400	630	280	16	13	39	46	7	3,5	49,5	92

Technical data for Sliprings

Drum type	Slipring type	N° of poles	Current 100% ED, max. A	Cross sec mm²	Max. voltage V	Housing Ø (mm)
40...–	02	24	50	max 10^2	500	205
	03	17	90	max 16^2	500	205
	06	7 u.>	200	max 35^2	660	360
	◤ 45	18	25	$2,5^2$	415	205
	◤ 80	32	16	$1,5^2$	125/380/500	205
	◤ 98	42/60	20/16	$2,5^2/1,5^2$	500	205

Housing dimensions

Dimension a Standard depth of housing in relations to N° of poles: Poles	Dim.	Poles	Dim.	Poles	Dim.	Poles	Dim.	PG– hole on housing
7	205	11	295	16	390	19	430	according to cable Ø
6	205	10	295	14	390	17	430	Pg 13,5
								16
4	225	7	350					21
7	205	13	295	18	390			29
24/22/18	205	32	295					36
12	205	24	295	36	390	42	430	42

◤ *Sliprings connected to cable terminals*
For size 58 only up to 24 poles

Standard model

Spring cable reel type 500 – Horizontal application

Choice of cable reel according to Search key 1.1 to 5.19. (for reeling length up to 60m.)

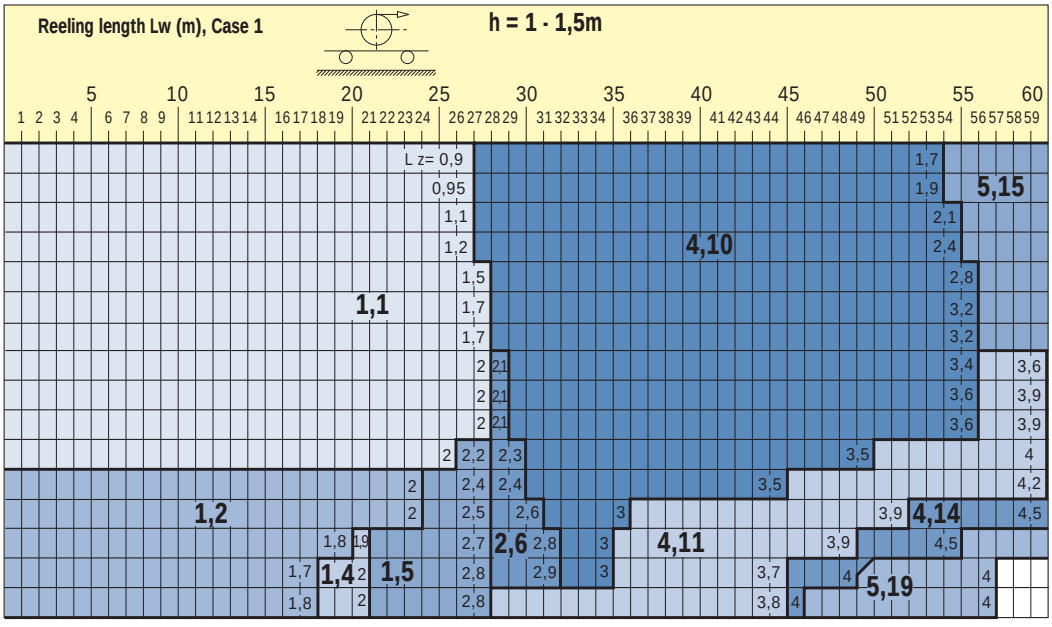

L z= N° of layers = *Grey background: Diameter of axis hole is 30mm*

Choice of cable reel according to Search key 4.14 to 6.21. (for reeling length 61 to 115m.)

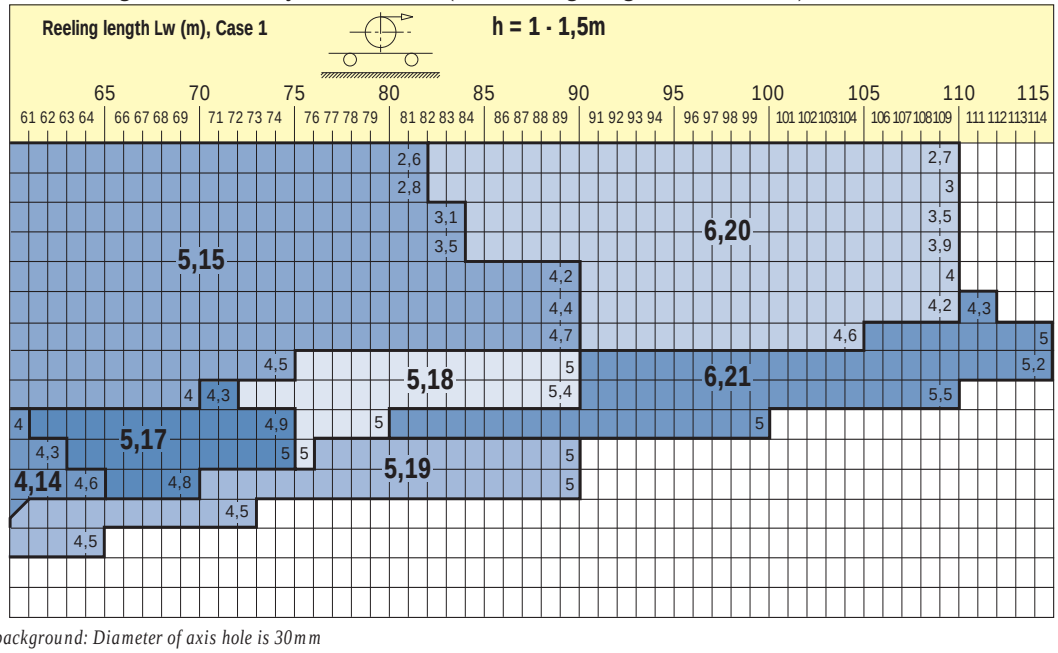

L z= N° of layers = *Grey background: Diameter of axis hole is 30mm*

(*) The correct cable data are given by each cable manufacturer and should be compared with the values in the tables.
For vertical applications the cable weight (kg/m) and additional load must be considered. Always check actual reeling length when near capacity limits.

Type 500

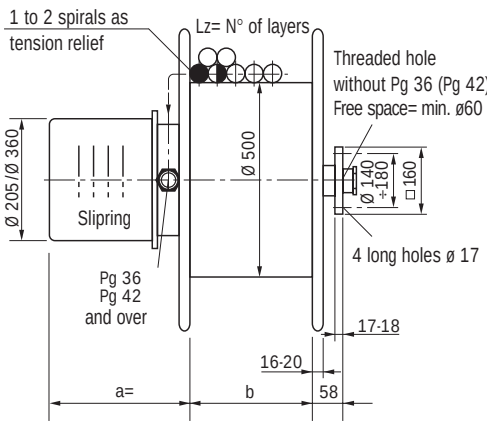

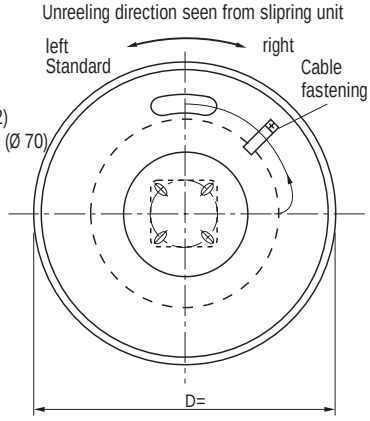

Technical data:
Drum in hot-dip galvanised steel.
Two bearings on each side of axis.
Springs are made of high-grade steel for long lifetime and mounted in separate housing.
Slipring housing in strong glassfiber reinforced plastic material.
Protection: IP65/66
Axis hole: ø 30 mm

Special dimension b= 215, D= > 900

Search key	Drum type	Slipring type	Dimensions (mm) d ø	Dø	b	Spring force (daN) Za	Fa	Fe	Z	Number of spring turns n vor	n Res.	n turns	Weight (kg)
1.1	**50712810TA –**		500	710	280	6	5	17	20	2,5	1,5	21	78
1.2	**50802810TA –**		500	800	280	6	5	17	20	2,5	1,5	21	80
1.3	**50712810UA –**		500	710	280	14	11	31	38	2,5	1	16,5	82
1.4	**50802810UA –**		500	800	280	14	11	31	38	2,5	1	16,5	84
1.5	**50902810UB –**	02	500	900	280	10	8,5	29	35	2,5	1,5	20	88
2.6	**50802812TA –**		500	800	280	12	10	34	40	2,5	1,5	21	84
2.7	**50802812UA –**	03	500	800	280	28	22	62	76	2,5	1	16,5	90
3.8	**50802813TA –**	05	500	800	280	18	15	51	60	2,5	1,5	21	88
3.9	**50802813UA –**		500	800	280	42	33	93	114	2,5	1	16,5	110
4.10	**50802820TA –**	09	500	800	280	6	5	17	20	5	3	42	84
4.11	**50902820TA –**		500	900	280	6	5	17	20	5	3	42	90
4.12	**50802820UA –**	(45)	500	800	280	14	11	31	38	5	2	33	90
4.13	**50802820UB –**		500	800	280	10	8,5	29	35	5	3	40	95
4.14	**50902820UB –**		500	900	280	10	8,5	29	35	5	3	40	102
5.15	**50802830TA –**	(58)	500	800	280	6	5	17	20	7,5	4,5	63	88
5.16	**50802830UA –**	98	500	800	280	14	11	31	38	7,5	3	49,5	110
5.17	**50902830UA –**		500	900	280	14	11	31	38	7,5	3	49,5	115
5.18	**50902830UB –**		500	900	280	10	8,5	29	35	7,5	4,5	60	118
5.19	**50903430UB –**		500	900	340	10	8,5	29	35	7,5	4,5	60	125
6.20	**50803440TA –**		500	800	340	6	5	17	20	10	6	84	115
6.21	**50903440UB –**		500	900	340	10	8,5	29	35	10	6	80	148

Technical data for Sliprings

Drum type	Slipring type	N° of poles	Current 100% ED, max. A	Cross sec mm²	Max. voltage V	Housing Ø (mm)
	02	24	50	max 10^2	500	205
	03	17	90	max 16^2	500	205
50...–	**06**	7	200	max 35^2	660	360
	◤ **45**	18	25	$2,5^2$	415	205
	◤ **80**	32	mA - 16A	$1,5^2$	125/380/500	205
	◤ **98**	42 60	20 16	$2,5^2/1,5^2$	500	205

Housing dimensions

Dimension a Standard depth of housing in relations to N° of poles Poles	Dim.	Poles	Dim.	Poles	Dim.	Poles	Dim.	PG– hole on housing
7	205	11	295	16	385	19	430	according to cable Ø
6	205	10	295	14	385	17	430	Pg 13,5
								16
4	225	7	350					21
7	205	13	295	18	385			29
24/22/18	205	32	295					36
12	205	24	295	36	385	42	430	42

◤ *Sliprings connected to cable terminals. For size 58 only up to 24 poles*

Standard model

Spring cable reel type 500 – Vertical application

Choice of cable reel according to Search key 1.1 bis 5.16.

Cable (*) ø (mm) from ... to ...	Weight kg/m max.
10 - 12	0.25
12 -14	0.30
14 - 16	0.40
16 - 18	0.45
18 - 20	0.55
20 - 22	0.70
22 - 24	0.80
24 - 26	0,95
26 - 28	1,10
28 - 30	1,30
30 - 32	1,50
32 - 34	1,60
34 - 36	1,80
36 - 38	2,25
38 - 40	2,50
40 - 42	2,80

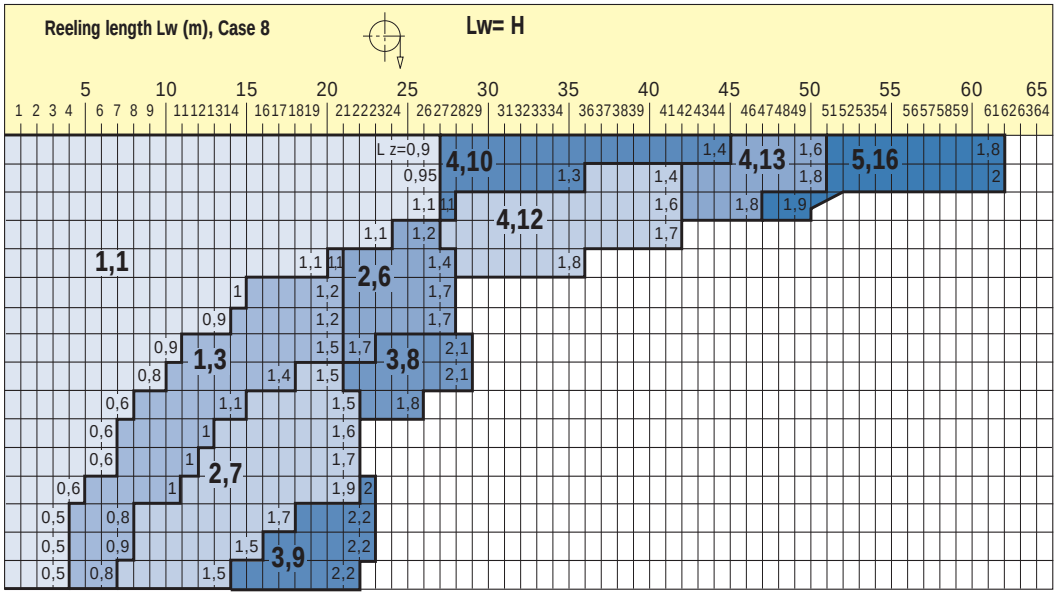

L z= N° of layers

= Grey background: Diameter of axis hole is 30mm

Technical data for Sliprings

Slipring type	Standard rings and brushes		Multi layer silverplating + Goldplated and silver brushes
02	50 m A < at 24 V <, max. 50 A , 500 V		—
45	50 m A < at 24 V and over max. 25 A 415 A		—
80	30 m A < at 24 V and over max. 16 A 500 V		Video signals and Data signals
98	50 m A < at 24 V max. 20 A 500 V		1 m A < at 10 mV and over

(*) The correct cable data are given by each cable manufacturer and should be compared with the values in the tables.
For vertical applications the cable weight (kg/m) and additional load must be considered. Always check actual reeling length when near capacity limits.

Type 500

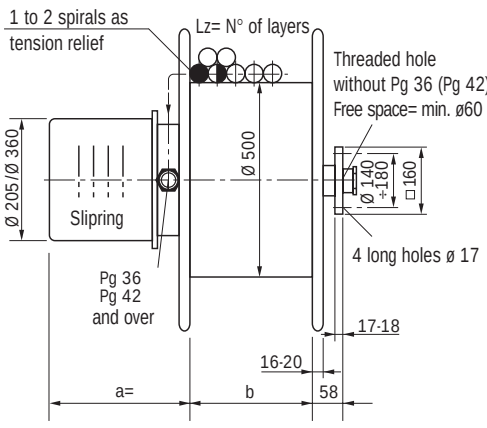

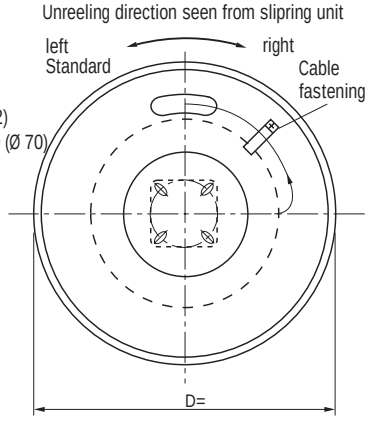

Technical data:
Drum in hot-dip galvanised steel.
Two bearings on each side of axis.
Springs are made of high-grade steel for long lifetime and mounted in separate housing.
Slipring housing in strong glassfiber reinforced plastic material.
Protection: IP65/66
Axis hole: ø 30 mm

Special dimension b= 215

Search key	Drum type	Slipring type	Dimensions (mm) d ø	Dø	b	Spring force (daN) Za	Fa	Fe	Z	Number of spring turns n vor	n Res.	n turns	Weight (kg)
1.1	**50712810TA –**		500	710	280	6	5	17	20	2,5	1,5	21	78
1.2	**50802810TA –**		500	800	280	6	5	17	20	2,5	1,5	21	80
1.3	**50712810UA –**		500	710	280	14	11	31	38	2,5	1	16,5	82
1.4	**50802810UA –**		500	800	280	14	11	31	38	2,5	1	16,5	84
1.5	**50902810UB –**	02	500	900	280	10	8,5	29	35	2,5	1,5	20	88
2.6	**50802812TA –**		500	800	280	12	10	34	40	2,5	1,5	21	84
2.7	**50802812UA –**	03	500	800	280	28	22	62	76	2,5	1	16,5	90
3.8	**50802813TA –**	05	500	800	280	18	15	51	60	2,5	1,5	21	88
3.9	**50802813UA –**		500	800	280	42	33	93	114	2,5	1	16,5	110
4.10	**50802820TA –**	09	500	800	280	6	5	17	20	5	3	42	84
4.11	**50902820TA –**		500	900	280	6	5	17	20	5	3	42	90
4.12	**50802820UA –**	(45)	500	800	280	14	11	31	38	5	2	33	90
4.13	**50802820UB –**	(47)	500	800	280	10	8,5	29	35	5	3	40	95
4.14	**50902820UB –**		500	900	280	10	8,5	29	35	5	3	40	102
5.15	**50802830TA –**	(58)	500	800	280	6	5	17	20	7,5	4,5	63	88
5.16	**50802830UA –**	98	500	800	280	14	11	31	38	7,5	3	49,5	110
5.17	**50902830UA –**		500	900	280	14	11	31	38	7,5	3	49,5	115
5.18	**50902830UB –**		500	900	280	10	8,5	29	35	7,5	4,5	60	118
5.19	**50903430UB –**		500	900	340	10	8,5	29	35	7,5	4,5	60	125
6.20	**50803440TA –**		500	800	340	6	5	17	20	10	6	84	115
6.21	**50903440UB –**		500	900	340	10	8,5	29	35	10	6	80	148

Technical data for Sliprings

Drum type	Slipring type	N° of poles	Current 100% ED, max. A	Cross sec mm²	Max. voltage V	Housing Ø (mm)
	02	24	50	max 10^2	500	250
	03	17	90	max 16^2	500	250
50...–	**06**	7u.>	200	max 35^2	660	360
	◤ **45**	18	25	$2,5^2$	415	250
	◤ **47**	7	50	6^2	500	250
	◤ **80**	32	mA - 16A	$1,5^2$	125/380/500	250
	◤ **98**	42 - $2,5^2$ 60 - $1,5^2$	20 16	$2,5^2/1,5^2$	500	250

Housing dimensions

Dimension a Standard depth of housing in relations to N° of poles Poles	Dim.	Poles	Dim.	Poles	Dim.	Poles	Dim.	PG– hole on housing
7	205	11	295	16	385	19	430	according to cable Ø
6	205	10	295	14	385	17	430	Pg 13,5
								16
4	225	7	350					21
7	205	13	295	18	385			29
5	205	7 u.>	295					36
24/22/18	205	32	295					42
12	205	24	295	36	385	42	430	

◤ *Sliprings connected to cable terminals. For size 58 only up to 24 poles*

Standard model

Application of Cavotec Alfo Spring - driven Reels

MICRO028

On a DEMAG Mobile Crane.

ALFSR011

On a DEMAG Mobile Crane.

ALFSC001

On a semi-mobile Crane in Finland.

ALFSR013

On a PAUS freight elevator.

ALFSR014

On a BROKK building machine.

ALFSR015

On a DEMAG Crane.

ALFSR016

On a PAUS freught elevator.

ALFSR017

On a MERLO Mobile Crane.

ALFSR018

On a LIEBHERR Mobile Crane.

ALFSR019

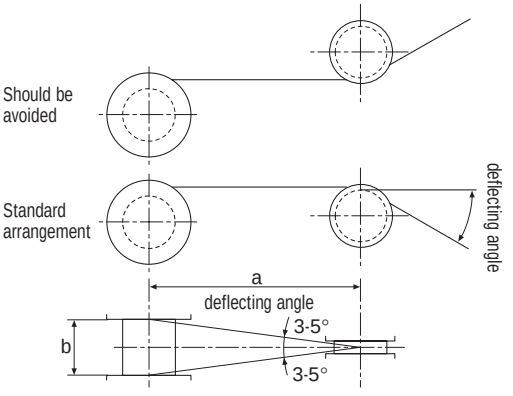

Springs

AA1–A–AA–0000	Spring AA
AA1–A–AB–0000	Spring AB
AA1–A–BA–0000	Spring BA
AA1–A–BC–0000	Spring BC
AA1–A–DA–0000	Spring DA
AA1–A–DB–0000	Spring DB
AA1–A–DC–0000	Spring DC
AA1–A–EA–0000	Spring EA
AA1–A–EB–0000	Spring EB
AA1–A–HA–0000	Spring HA
AA1–A–SA–0000	Spring SA
AA1–A–TA–0000	Spring TA
AA1–A–UA–0000	Spring UA
AA1–A–UB–0000	Spring UB

Accessories

ALFSR020

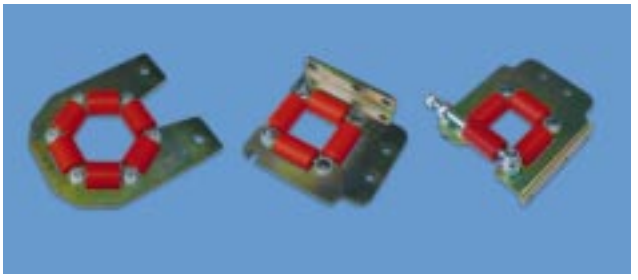

Our specially developped accessories have proven themselves over the years in many special applications. They guarantee a very smooth cable transit ensuring a long working life.

Art. Nr.
A06-B-01980-0Z
A06-B-02000-0Z
A06-B11180-0Z

ALFSR021

Cable Guide Noose

Art. Nr.	Type	Cable Ø
A09-B-Z0810-1	Type - 08	8-10 mm
A09-B-Z1013-1	Type - 12	10-13 mm
A09-BZ1216-1	Type - 15	12-16 mm
A09-B-Z1518-1	Type - 17	15-18 mm
A09-B-Z1822-1	Type - 20	18-22 mm
A09-B-Z2228-1	Type - 25	22-28 mm
A09-B-Z2733-1	Type - 30	27-33 mm
A09-B-Z3338-1	Type - 35	33-38 mm

ALFSR022

Guidewheels

Type	Art.-Nr.
UR-190	A09-F19035-10
UR-280	A09-F28035-10
UR-400	A09-F40035-10

Size b [mm]	Deflecting angle 3° a [mm]	Deflecting angle 5° a [mm]
40	400	230
70	700	400
110	1050	650
136	1300	800
180	1700	1050
220	2100	1250
280	2600	1630
380	3350	1900°

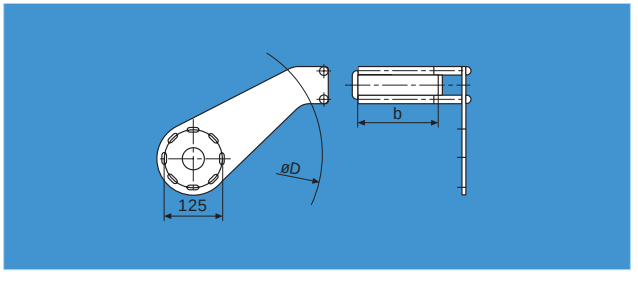

Guide arm short version for FLT 19/28

Type	Art.-Nr.
Guide arm 19/28-36-14 Ø 360	A06-A193614-OZ
Guide arm 19/28-36-18 Ø 360	A06-A193618-OZ
Guide arm 19/28-36-21 Ø 360	A06-A193621-OZ
Guide arm 19/28-55-14 Ø 550	A06-A195514-OZ
Guide arm 19/28-55-18 Ø 550	A06-A195518-OZ
Guide arm 19/28-55-21 Ø 550	A06-A195521-OZ

- Side plate diameter D: 360mm, 550mm
- Winding width b: 136mm, 180mm, 215mm

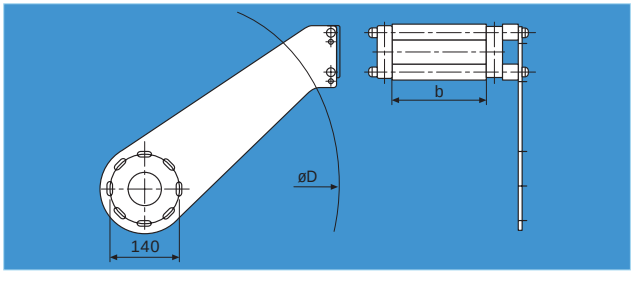

Guide arm short version for FLT 40/50

Type	Art.-Nr.
Guide arm 40/50-80-21 Ø 800	A06-A408021-OZ
Guide arm 40/50-80-28 Ø 800	A06-A408028-OZ
Guide arm 40/50-80-34 Ø 800	A06-A408034-OZ
Guide arm 40/50-100-21 Ø 1000	A06-A40A021-OZ
Guide arm 40/50-100-28 Ø 1000	A06-A40A028-OZ
Guide arm 40/50-100-34 Ø 1000	A06-A40A034-OZ

- Side plate diameter D: 800mm, 1000mm
- Winding width b: 213mm, 280mm, 340mm

ALFSR023

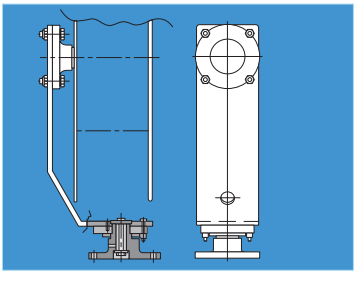

Mounting support and pivot bearing for connection to walls, floors and covers

Type	Art.-Nr.
Mounting support 19/28 - Ø 550	AA9-L05361-OZ
Mounting support 40/50 - Ø 800	AA9-L04651-OB

Type	Art.-Nr.
pivot bearing 19/28	A09-L28000-OZ

CAVOTEC

Power supply and crane technology

Cavotec Group Headquarters

The Netherlands
Cavotec Group Holdings N.V.
Postbus 213
NL-2950 AE Alblasserdam
phone: int. 31-78-693 0794
fax: int. 31-78-693 1212

U.K.
Cavotec International Ltd
Stirling Way, Market Deeping
Lincolnshire PE6 8AS
phone: int. 44-1778.346 769
fax: int. 44-1778.341 850

For more information consult our home page on the Internet:
www.cavotec.com

E-commerce sites:
www.cavotecshop.com
www.flexiblecables.com

Cavotec Group Manufacturing Companies

Australia
Cavotec Metool
Cardiff (Newcastle)
Perth

France
Cavotec RMS
Cergy Pontoise (Paris)

Germany
Cavotec Alfo
Overath (Köln)

Italy
Cavotec Specimas
Nova Milanese (Milan)

Sweden
Cavotec Connectors
Dalby (Malmö)

U.S.A./Canada
Cavotec Inc.
Statesville, NC

Cavotec Partners

Brevetti Stendalto
Monza, Italy

De Jong
Leerdam, The Netherlands

Micro-control
Stjørdal, Norway

Pirelli Cavi
Milan, Italy

Cavotec Group Sales Companies and Distributors

Argentina
Cavotec Latin America
Buenos Aires

Australia
Cavotec Metool
Cardiff (Newcastle),
Brisbane, Sydney, Perth,
Melbourne

Bahrain
Cavotec Bahrain
Manama

BeNeLux
Cavotec Benelux
Alblasserdam (Rotterdam)
The Netherlands

Brasil
Marlin Gantrex
Rio de Janeiro

Chile
Gantrex
Santiago

China
Cavotec China
Shanghai

Denmark
Cavotec Danmark
Odense

Egypt
Ase, Cairo

Finland
Cavotec Finland
Espoo (Helsinki)

France
Cavotec RMS
Cergy Pontoise (Paris)

Germany
Cavotec Alfo
Eschborn (Frankfurt)

Hong Kong
Cavotec Hong Kong
Shatin

Indonesia
Cavotec Indonesia
Jakarta Utara

Italy
Cavotec Italia
Nova Milanese (Milan)

Japan
Nippon Ican
Tokyo

Korea
Cavotec Korea
Ulsan

Norway
Cavotec Norge
Drammen

Philippines
Portek Philippines
Quezon City

Saudi Arabia
AKTE
Dammam

Singapore
Cavotec Singapore
Singapore

South Africa
Gantrex
Germiston

Sweden
Cavotec Sverige
Stockholm

Taiwan
Ehrung Industrial
Taipei Hsein

U.A.E.
Cavotec Middle East
Dubai,
Abu Dhabi,
Bahrain

U.K. & Ireland
Cavotec UK
Market Deeping

U.S.A. & Canada
Cavotec Inc.
Statesville, NC

X2EN-ALFO0 - 03 - 2002 - .3000 Ellevi.

Feb.2002